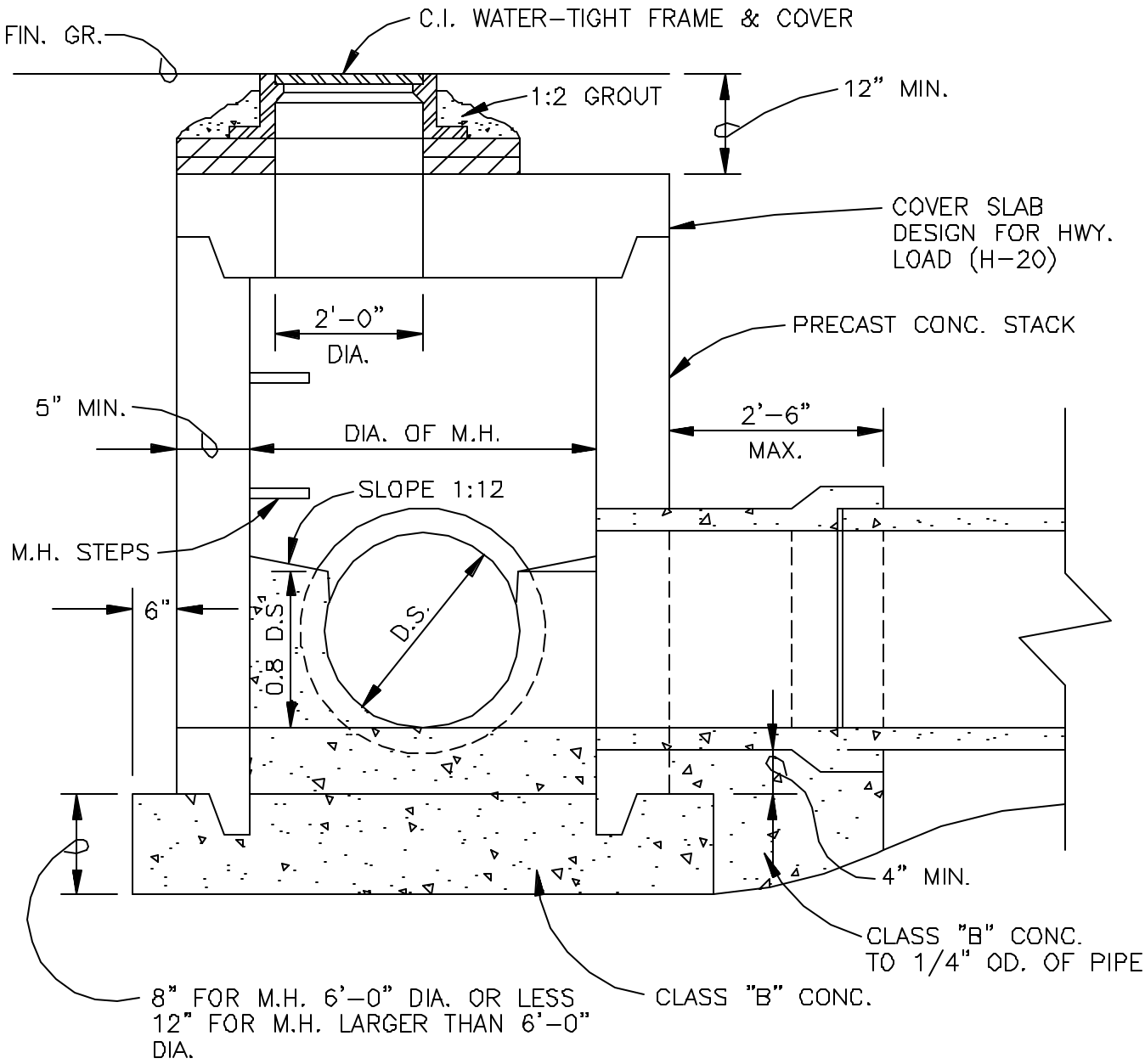

SHALLOW MANHOLE DETAIL

CHEROKEE COUNTY WATER & SEWERAGE AUTHORITY	SHALLOW MANHOLE DETAIL CONSTRUCTION STANDARD	DATE:	FEB. '03	STANDARD NO. S705
		APPROVED:		